metec

INGENIEUR - AKTIENGESELLSCHAFT · MEDIZINTECHNIK · FEINWERKTECHNIK

Modul P20

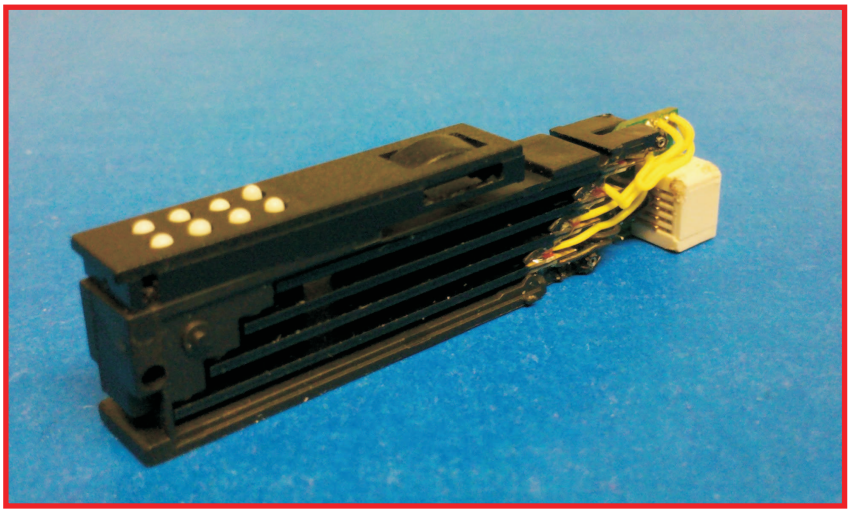

Dimensions

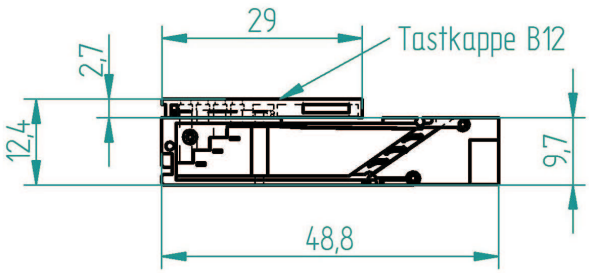

Gesamtlänge mit Backplane l=53,2mm

Description

Braille-cell with 8 dots, driven by piezo-actuators (bending type). Active Backpanel for 6 or 8 cells each, stackable. Flat or concave tactile surface without or with one interaction button (datasheet “Caps B12”, one interaction button, PCB with interaction switch is not included).

Data

Dimensions (w x h x d):	6.42 x 12,4 x 53,2 mm
Dot spacing:	2.45 mm
Dot stroke:	ca. 0.7 mm
Cell spacing:	6.42 mm
Use of metal tray is recommended	
Tactile force:	min. 17 cN
Connector:	Micro Board to Board, 0,8mm Pitch, 10 pins
Drive electronic:	Low-power electronic on active backpanel for 8 or 4 cells. (4 cells is an end-type -only one for a unit possible)

P20 H07-1

METEC AG · Hasenbergstr. 31 · 70178 STUTTGART · GERMANY
TELEFON:(07 11) 66 60 3-0 · TELEFAX:(07 11) 66 60 333 · E-MAIL:contact@metec-ag.de

Modul P20

Data

Power requirements:

200 V +-5%:	absolute max. rating 215 V 1,2 µA typ. per dot
Dot rising time:	50 ms
Connector pinning: (1-10)	200V (200V = dot down) Dot 3 Dot 4 Dot 6 Dot 5 Dot 7 Dot 1 Dot 8 GND Dot 2

Environmental Specifications:

Operational:	Temperature 10 °C to 40 °C Humidity 10 % - 70 % RH non condensing
Storage:	Temperature -15 °C to 60 °C Humidity 5 % - 90 % RH non condensing
Accessories:	Metal trays active Backpanel Caps B12 connecting Cable Backplane 200mm (Connector DF13-7S-1,25)

Average piezo actuations: > 10^9

METEC AG · Hasenbergstr. 31 · 70178 STUTTGART · GERMANY
TELEFON:(07 11) 66 60 3-0 · TELEFAX:(07 11) 66 60 333 · E-MAIL:contact@metec-ag.de

Modul P20

Backpanel

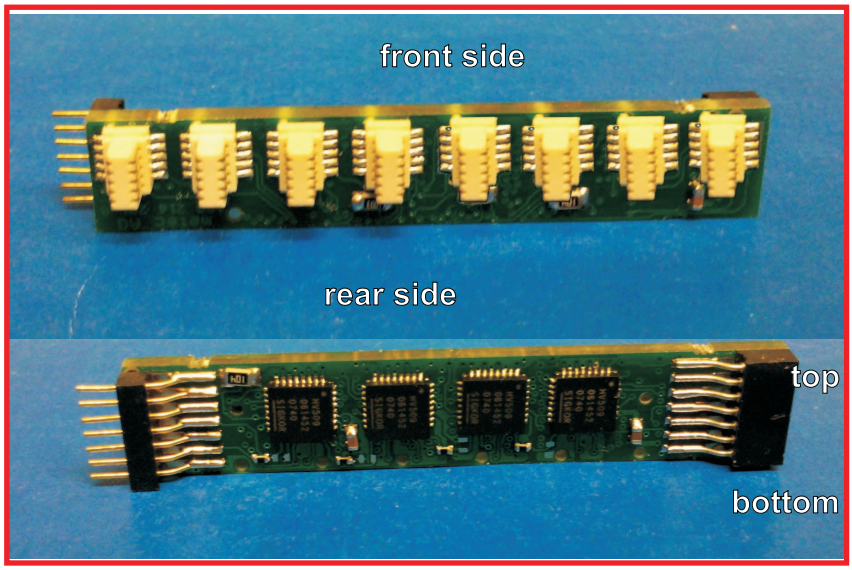

Electrical interface

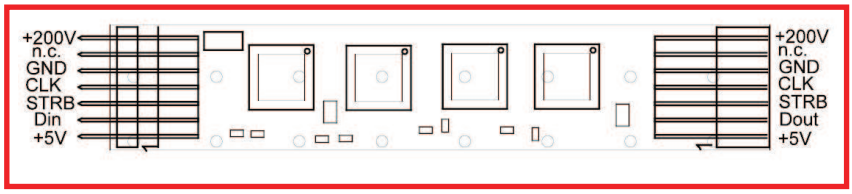

Data

Drive electronic:	Low-power electronic for 8 or 4 cells (4 is only one in a line possible).
Power requirements:	
3,3 - 5 V +-5%:	25µA typ. per cell (with static driven signals, no key pressed)
200 V +-5%:	Absolute max. rating 215 V 5 µA typ. per dot
Max. Transition time clock & strobe:	125 ns
Max. clock speed:	500 kHz
Data sequence:	7 8 3 2 1 6 5 4 Braille-dot sequence 0=Pin set
Environmental Specifications:	
Operational:	Temperature 10 °C to 40 °C Humidity 10 % - 70 % RH non condensing
Storage:	Temperature -15 °C to 60 °C Humidity 5 % - 90 % RH non condensing

Specifications are subject to change without notice.

P20 H07-3

METEC AG · Hasenbergstr. 31 · 70178 STUTTGART · GERMANY
TELEFON: (07 11) 66 60 3-0 · TELEFAX: (07 11) 66 60 333 · E-MAIL: contact@metec-ag.de